PROPOSED DORMER & INTERIOR RENOVATIONS

116 WINTHROP STREET
MEDWAY, MASSACHUSETTS

EXISTING

GENERAL NOTES:

CONTRACTOR RESPONSIBILITY-
CONTRACTOR IS SOLELY RESPONSIBLE FOR:

1. VIEWING SITE AND INCLUDING ANY SPECIAL CONDITIONS NECESSARY TO PERFORM THE WORK AS DESCRIBED IN THE DRAWINGS.
2. ESTABLISHING CONTROL OF THE SITE VIA SURVEY, AND LAYOUT.
3. OBTAINING AND PAYING FOR ALL PERMITS.
4. PAYING FOR ALL TEMPORARY UTILITIES AND FACILITIES.
5. CHECKING AND CONFIRMING ALL DIMENSIONS, AND LAYOUTS.
6. SCHEDULING AND SEQUENCING.
7. CONSTRUCTION MEANS, METHODS AND TECHNIQUES
8. FOLLOW CONSTRUCTION DRAWINGS OR MANUFACTURER'S SPECIFICATIONS, WHICHEVER IS MORE RESTRICTIVE.
9. MAINTAINING DRAWINGS AND PERMITS ON SITE.
10. JOB SITE SAFETY
11. COORDINATION BETWEEN TRADES, AND SUPPLIERS.
12. PROVIDE SCHEDULE TO OWNER AND ARCHITECT,
13. PROVIDE A SCHEDULE OF VALUES TO THE OWNER AND ARCHITECT.
14. TEMPORARY HEAT, ICE AND SNOWPLOWING IS THE RESPONSIBILITY OF THE CONTRACTOR.
15. SITE CLEANLINESS AND CONFORMANCE TO NFPA 241 REQUIREMENTS.
16. REPAIRING ANY WORK DAMAGED BY HIS FORCES WHILE PERFORMING THIS CONTRACT.
17. GIVING WARRANTY FOR HIS WORK FOR A PERIOD OF ONE YEAR FROM THE DATE OF FINAL COMPLETION.

REVIEW OF WORK BY DESIGNERS-

CONTRACTOR SHALL NOTIFY ARCHITECT BEFORE PROJECT STARTS.

CONTRACTOR SHALL NOTIFY ARCHITECT, ONE WEEK PRIOR TO:

18. POURING CONCRETE
19. INSULATING
20. INSTALLING DRYWALL
21. FINAL INSPECTION

SHOP DRAWINGS-

ALL SHOP DRAWINGS SHALL BE SUBMITTED 30 DAYS AFTER CONTRACT AWARD.

GENERAL CONTRACTOR SHALL APPROVE SHOP DRAWINGS, PRIOR TO SUBMITTING TO ARCHITECT OR ENGINEER.

NON SUBMISSION DOES NOT CONSTITUTE APPROVAL OF ANY WORK.

NO EXCEPTIONS TAKEN DOES NOT RELIEVE THE CONTRACTOR OF PERFORMING ANY OTHER WORK ON THE DRAWINGS.

CONTRACTOR SHALL EXPECT A MINIMUM OF 2 WEEKS FOR DESIGNERS' REVIEW TIME.

ANY VARIANCE FROM THE ORIGINAL DESIGN SHALL BE NOTED.

ANY SUBSTITUTION NOT INDICATED SHALL NOT CONSTITUTE APPROVAL OF A CHANGE.

SHOP DRAWINGS ARE NOT COORDINATION DRAWINGS.

DESIGNERS ARE NOT RESPONSIBLE FOR DIMENSIONS.

CONTRACTOR TO ENSURE MATERIALS AND ASSEMBLIES ARE COMPATIBLE AND ACCEPTABLE TO THE MANUFACTURER. ALL ASSEMBLY MATERIALS SHALL BE FROM A SINGLE SOURCE AS MUCH AS POSSIBLE.

REQUEST FOR INFORMATION -

ONLY RFI'S SENT THROUGH BY THE OWNER AND AWARDING CONTRACTOR WILL BE ANSWERED. SUBCONTRACTORS MUST SUBMIT RFI'S THROUGH THE GENERAL CONTRACTOR.

BIDDING PHASE - OWNER AND AWARDING CONTRACTOR ARE RESPONSIBLE FOR COMPILING AND AGGREGATING RFI'S AND SUBMITTING TO THE ARCHITECT OR DESIGNER AT ONE TIME ONLY. ARCHITECT OR DESIGNER HAS ONE WEEK TO RESPOND. QUESTIONS MUST BE COMPLETE , NOT PIECEMEAL AND SHOULD BE SUBMITTED BY CSI DIVISION.

CHANGE ORDERS-

CONTRACTOR SHALL VISIT THE SITE AND BE THOROUGHLY ACQUAINTED WITH THE PROJECT PRIOR TO SUBMITTING A PRICE. ADDITIONAL MONEY WILL NOT BE GRANTED FOR WORK NOT CLARIFIED PRIOR TO BIDDING.

DESIGNER SHALL BE NOTIFIED OF ANY CHANGE TO THE DRAWINGS, UNFORESEEN FIELD CONDITIONS OR DISCREPANCIES PRIOR TO PERFORMING WORK.

ANY PROPOSED CHANGES SHALL BE ACCOMPANIED WITH A WRITTEN DESCRIPTION OR A SKETCH FOR CLARIFICATION.

ALL CHANGE ORDERS SHALL BE APPROVED PRIOR TO PERFORMING WORK.

CHANGE ORDERS SHALL BE PRICED EITHER LUMP SUM OR UNIT PRICE OR TIME AND MATERIALS.

ANY SUBSTITUTION REQUEST SHALL BE MADE VIA CHANGE ORDER, AND NOT VIA SHOP DRAWINGS UNLESS AGREED TO.

ANY CHANGE SHALL STATE THE CREDIT OR COST ADD AND/OR ANY CHANGE TO THE SCHEDULE.

REQUISITIONS-

ANY REQUISITION REQUIRED TO BE SIGNED BY THE ARCHITECT SHALL BE SUBMITTED A MINIMUM OF ONE WEEK PRIOR TO BEING SUBMITTED TO THE BANK FOR REVIEW.

CONTRACTOR SHALL PROVIDE RECEIPTS AND INSURANCE CERTIFICATES FOR ANY MATERIALS FOR PAYMENT FOR ANY UNINSTALLED MATERIALS.

WOOD NOTES:

1. ALL LUMBER SHALL HAVE A MOISTURE CONTENT OF NOT MORE THAN 19%.
2. ALL FRAMING LUMBER SHALL BE #2 SPF, OR BETTER, HAVING A MINIMUM:
   FB=875 PSI, FV=135 PSI, E=1,300,000 PSI.
3. ALL JOIST SPANS SHALL HAVE ONE ROW OF 1" X 3: CROSS BRIDGING AT MID SPAN AND NOT MORE THAN 8'-O" O.C.
4. ALL STUD BEARING WALLS SHALL HAVE ONE ROW OF 2X HORIZONTAL BLOCKING AT 1/2 STUD HEIGHT, AND NOT MORE THAN 6'-O" O.C. MAXIMUM.
5. PROVIDE AND INSTALL ALL NECESSARY TIMBER CONNECTORS WITH ADEQUATE STRENGTH.
6. PROVIDE DOUBLE JOIST BELOW PARTITIONS PARALLEL TO JOIST FRAMING.
7. PROVIDE SOLID BRIDGING BELOW PARTITIONS PERPENDICULAR TO JOIST FRAMING.
8. PROVIDE SOLID BRIDGING BETWEEN JOIST FRAMING MEMBERS WHEN BEARING ON STUD PARTITIONS OR BEAMS.
9. PROVIDE A CONTINUOUS BAND JOIST AT EXTERIOR STUD WALLS.
10. PROVIDE DIAGONAL METAL STRAP BRACING AT ALL CORNERS AND WALL INTERSECTIONS, AT THE INSIDE FACE OF STUDS, FROM TOP PLATE TO FLOOR PLATE AT A 45 DEGREE ANGLE WITH A SIMPSON TYPE "RCWB" STRAP, OR EQUAL.
11. ALL BUILT-UP BEAMS SHALL BE BOLTED WITH ½" Ø THRU BOLTS, MEETING A307 STANDARDS, OR, AS NOTED ON DRAWINGS.

WOOD LINTEL SCHEDULE:

Lintels over openings in bearing walls shall be as follows;or as noted on drawings.

Span of opening:	Size: 2x6 studs	Size: 2x4 studs
less than 4'-0"	3 - 2x4	2 - 2x4
up to 6'-0"	3 - 2x6	2 - 2x6
up to 8'-0"	3 - 2x8	2 - 2x8
up to 10'-0"	3 - 2x10	2 - 2x10

DESIGN CRITERIA:

ALL WORK PERFORMED UNDER THIS CONTRACT SHALL CONFORM TO THE NINTH EDITION OF THE MASSACHUSETTS BUILDING CODE.

DESIGN LIVE LOAD = 40 POUNDS PER SQUARE FOOT
- FLOORS
- PRIVATE DECK

DESIGN SNOW LOAD = 40 POUNDS PER SQUARE FOOT WITH SNOW DRIFT WHERE APPLICABLE.

WIND LOAD = 129 MILES PER HOUR

SEISMIC: Ss = 0.217
S1 = 0.069

ALL LUMBER SHALL BE #2 SPF, Fb= 875 PSI, Fv=135 PSI.

NOTE: THERE HAS BEEN NO SOIL TESTING PROVIDED TO THIS OFFICE FOR THIS PROJECT. THE DESIGNING ARCHITECT OR STRUCTURAL ENGINEER ACCEPTS NO RESPONSIBILITY FOR EXISTING SOIL CONDITIONS. ANY SOIL BEARING CAPACITY OF THIS FOUNDATION SYSTEM IS DESIGNED BASED ON A 2 TON MINIMUM SOIL BEARING CAPACITY. IT SHALL BE THE CONTRACTORS OR OWNERS' RESPONSIBILITY TO DETERMINE SUITABLE SOIL CONDITIONS AND VERIFY THE BEARING PRESSURE. IF A SUITABLE SOIL THAT CAN WITHSTAND A 2 TON BEARING CAPACITY IS NOT AVAILABLE, THIS OFFICE SHOULD BE CONTACTED BY THE CONTRACTOR OR OWNER FOR A FOUNDATION REDESIGN.

CODE SUMMARY

EX'G TO REMAIN TYPE 4 CONSTRUCTION

EXISTING TO REMAIN 2 STORIES & BASEMENT

EXISTING TO REMAIN R-1 USE GROUP (SINGLE FAMILY)

DRAWING LIST

C-0 COVER SHEET

A-1.0 EXIST/DEMO & PROPOSED BASEMENT PLANS
A-1.1 EXIST/DEMO & PROPOSED FIRST FLOOR PLANS
A-1.2 EXIST/DEMO & PROPOSED SECOND FLOOR PLANS
A-1.3 EXIST/DEMO & PROPOSED THIRD FLOOR PLANS
A-1.4 EXISTING/DEMO & PROPOSED ROOF PLAN
A-1.5 WALL ASSEMBLIES & ROOF DETAILS
A-1.6 FASTENING SCHEDULE & FRAMING DETAILS

KEY

- NEW WALL
- EX'G WALL TO REMAIN
- WALL TO BE REMOVED
- SD FIRE SMOKE DETECTOR
- Co CARBON MONOXIDE DETECTOR
- HD FIRE THERMAL HEAT DETECTOR
- FAN

Location

PROPOSED DORMER & INTERIOR RENOVATION
116 WINTHROP STREET
MEDWAY, MA 02053

Choo & Company, Inc.
One Billings Road Quincy, MA 02171
617-786-7727 fax 617-786-7715

REGISTERED ARCHITECT ARTHUR K.F. CHOO No. 6319 BOSTON MA COMMONWEALTH OF MASSACHUSETTS

No.	Description	Date

Project No: 2024167
Scale: AS NOTED
Date: 09-04-2024
Drawn By: AMF

Drawing Name

COVER SHEET

Sheet No.

C-0

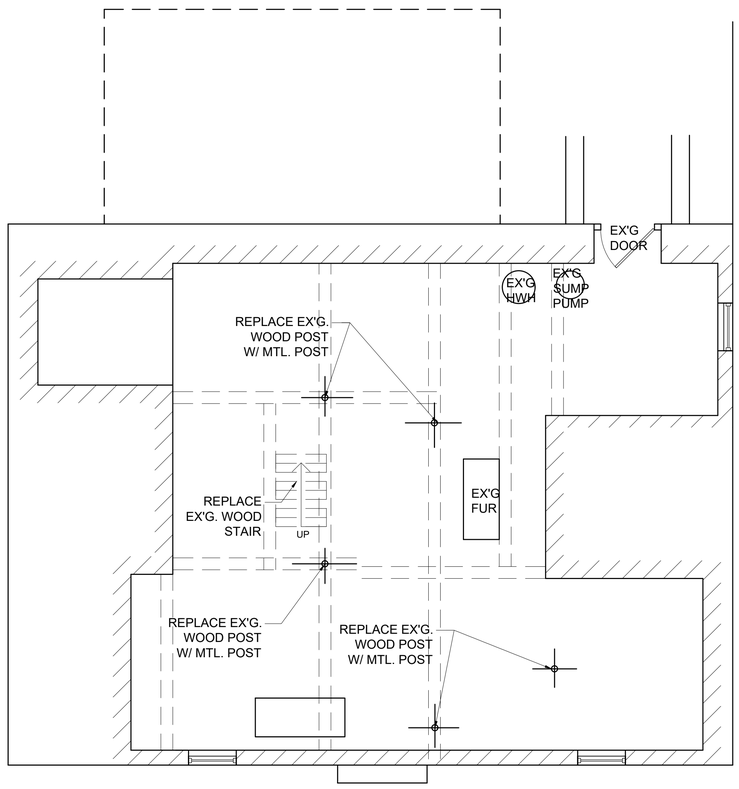

1 EXISTING/DEMO BASEMENT PLAN
1/4" = 1'-0"

WINTHROP STREET

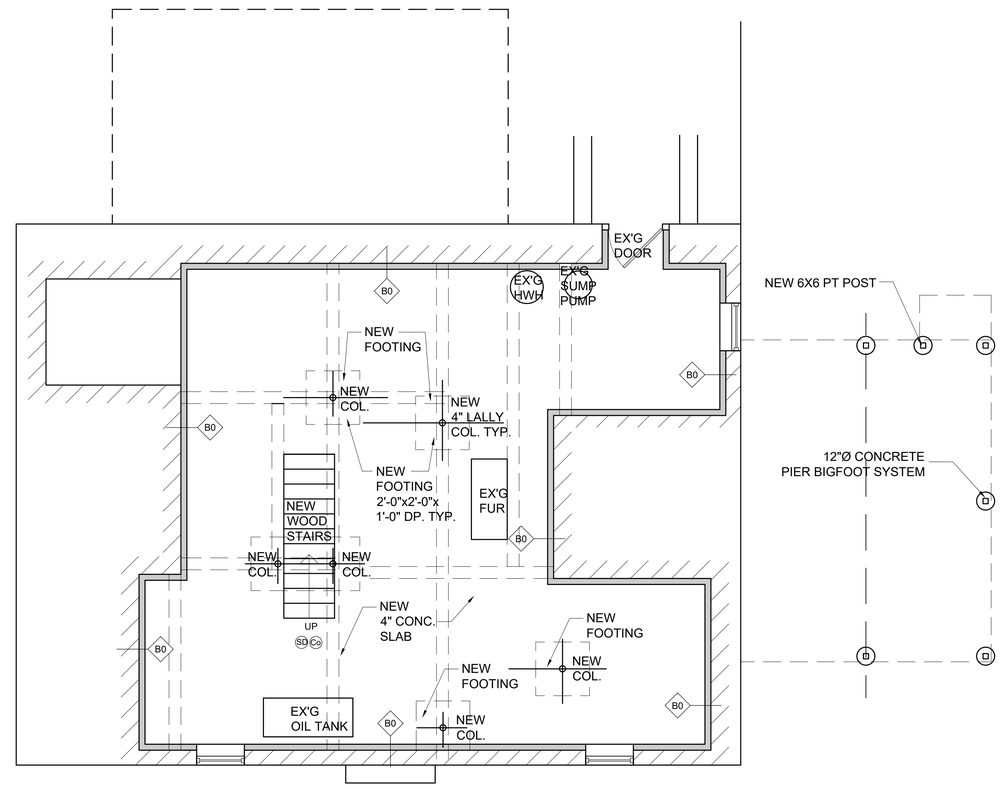

2 PROPOSED BASEMENT PLAN
1/4" = 1'-0"

WINTHROP STREET

Location

PROPOSED DORMER & INTERIOR RENOVATION 116 WINTHROP STREET MEDWAY, MA 02053

Choo & Company, Inc.
One Billings Road Quincy, MA 02171
617-786-7727 fax 617-786-7715

REGISTERED ARCHITECT ARTHUR K.F. CHOO No. 6319 BOSTON MA COMMONWEALTH OF MASSACHUSETTS

No.	Description	Date

Project No: 2024167
Scale: AS NOTED
Date: 09-04-2024
Drawn By: AMF

Drawing Name

EXIST/DEMO & PROPOSED BASEMENT PLANS

Sheet No.

A-1.0

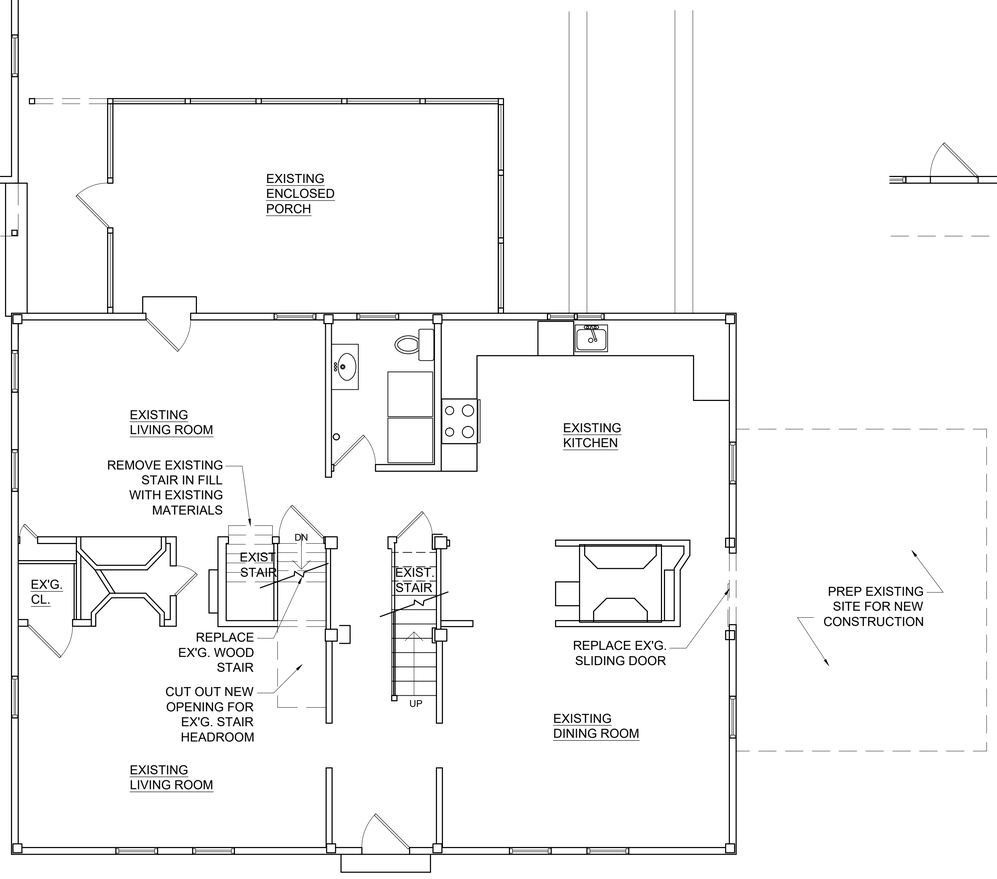

1 EXISTING/DEMO FIRST FLOOR PLAN
1/4" = 1'-0"

WINTHROP STREET

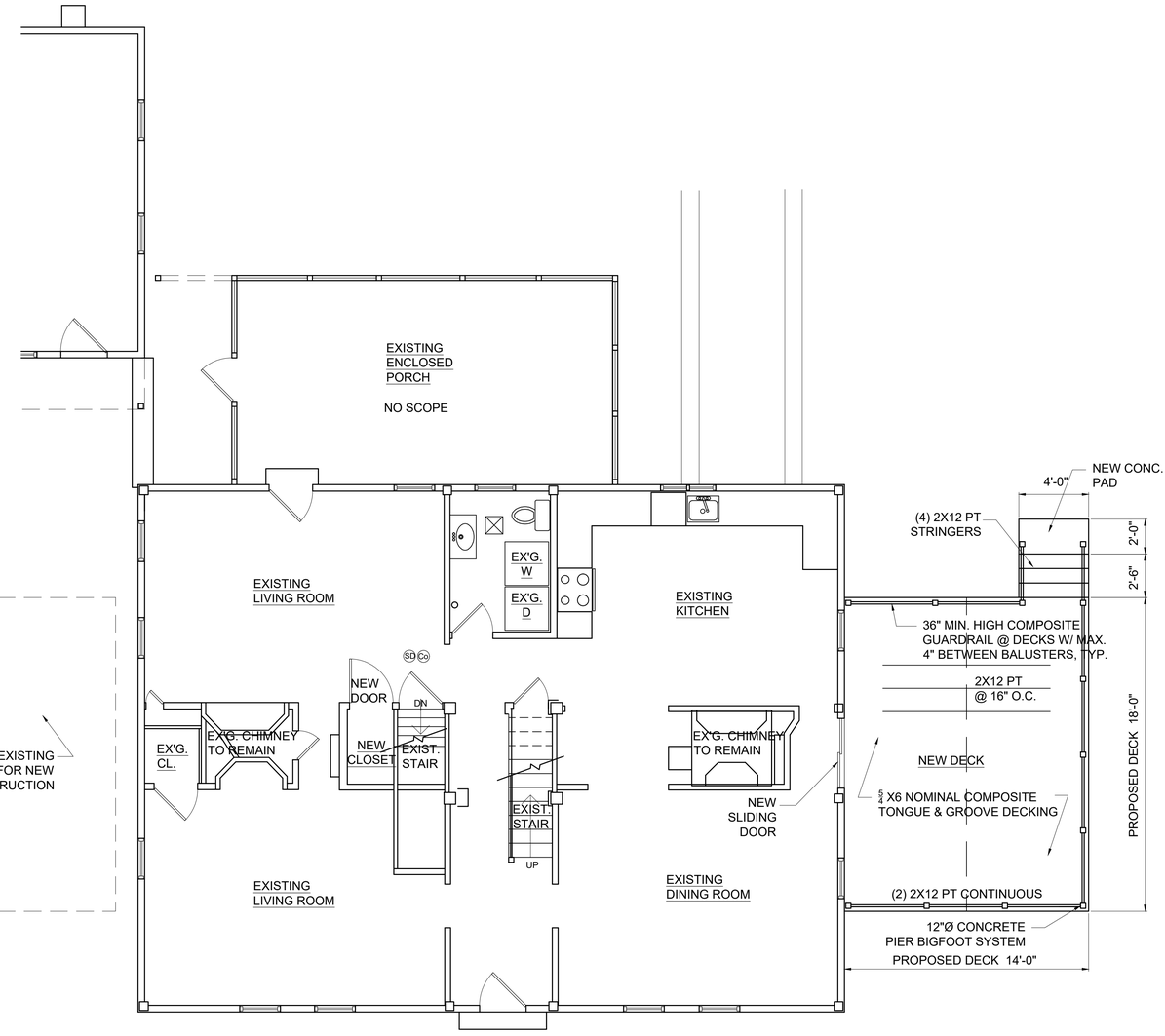

2 PROPOSED FIRST FLOOR PLAN
1/4" = 1'-0"

WINTHROP STREET

Location

PROPOSED DORMER & INTERIOR RENOVATION 116 WINTHROP STREET MEDWAY, MA 02053

Choo & Company, Inc.
One Billings Road Quincy, MA 02171
617-786-7727 fax 617-786-7715

REGISTERED ARCHITECT ARTHUR K.F. CHOO No. 6319 BOSTON MA COMMONWEALTH OF MASSACHUSETTS

No.	Description	Date

Project No: 2024167
Scale: AS NOTED
Date: 09-04-2024
Drawn By: AMF

Drawing Name

EXIST/DEMO & PROPOSED FIRST FLOOR PLANS

Sheet No.

A-1.1

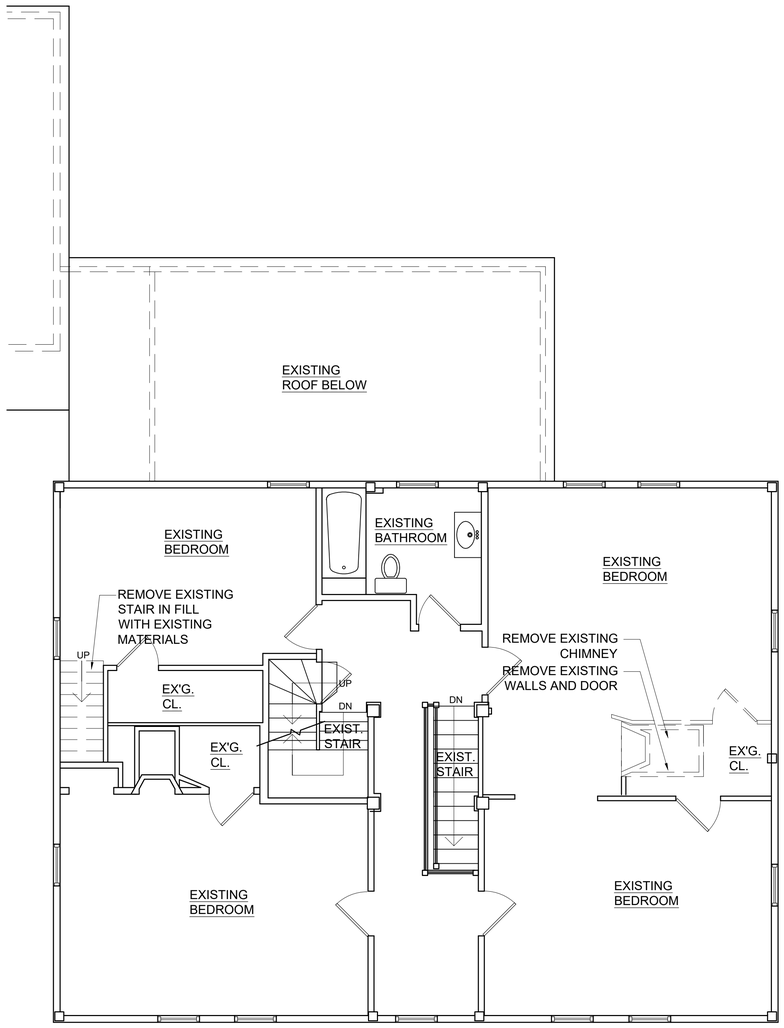

1 EXISTING/DEMO SECOND FLOOR PLAN

1/4" = 1'-0"

WINTHROP STREET

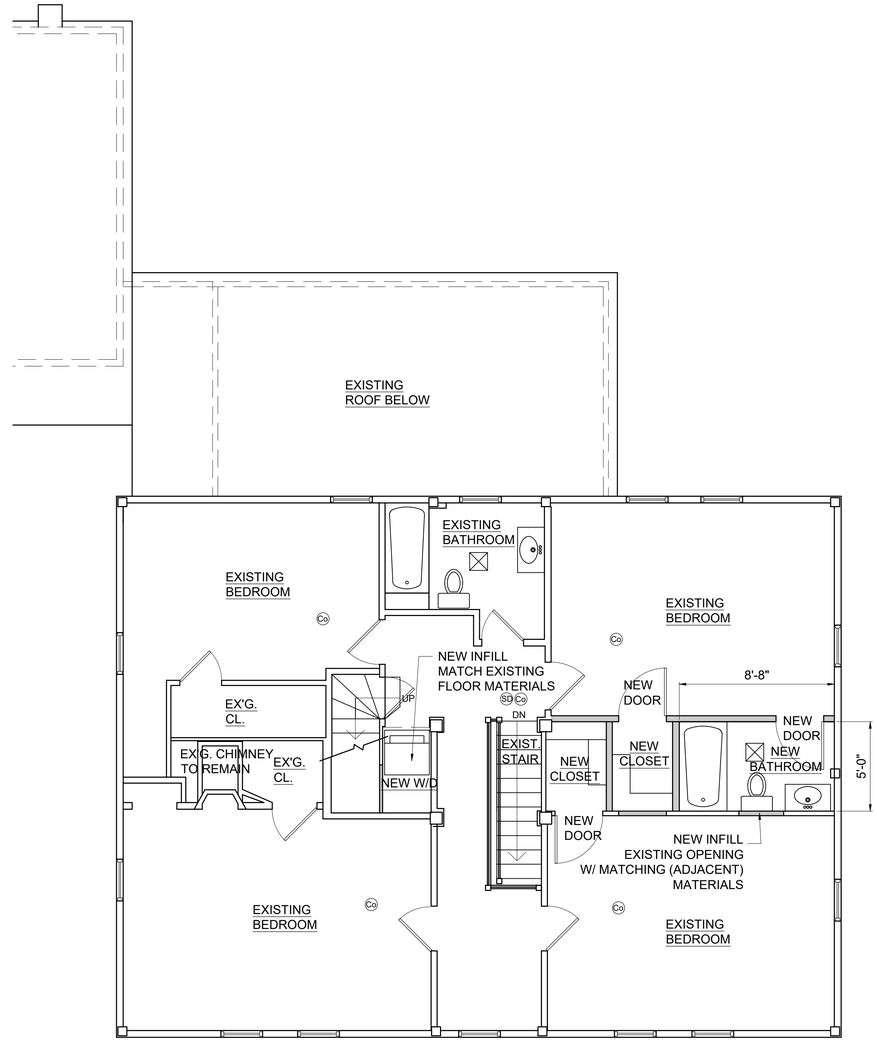

2 PROPOSED SECOND FLOOR PLAN

1/4" = 1'-0"

WINTHROP STREET

Location

PROPOSED DORMER & INTERIOR RENOVATION 116 WINTHROP STREET MEDWAY, MA 02053

Choo & Company, Inc.
One Billings Road Quincy, MA 02171
617-786-7727 fax 617-786-7715

REGISTERED ARCHITECT
ARTHUR K.F. CHOO
No. 6319
BOSTON
MA
COMMONWEALTH OF MASSACHUSETTS

No.	Description	Date

Project No: 2024167

Scale: AS NOTED

Date: 09-04-2024

Drawn By: AMF

Drawing Name

EXIST/DEMO & PROPOSED SECOND FLOOR PLANS

Sheet No.

A-1.2

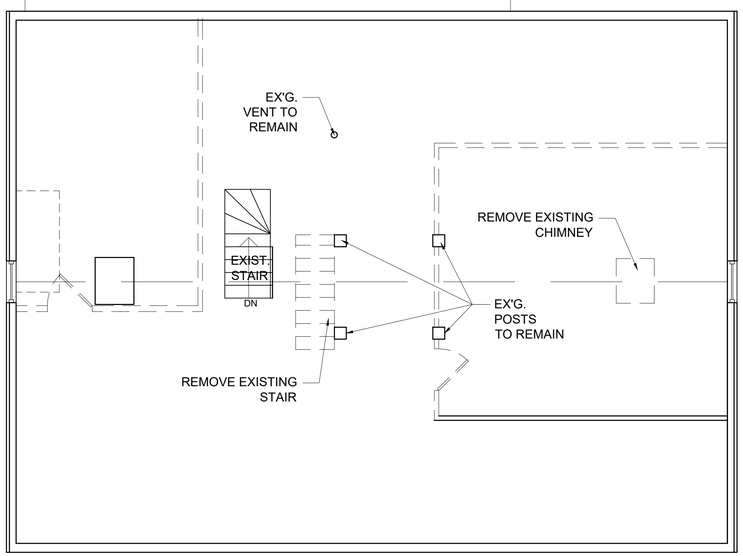

1 EXISTING/DEMO ATTIC FLOOR PLAN
1/4" = 1'-0"

WINTHROP STREET

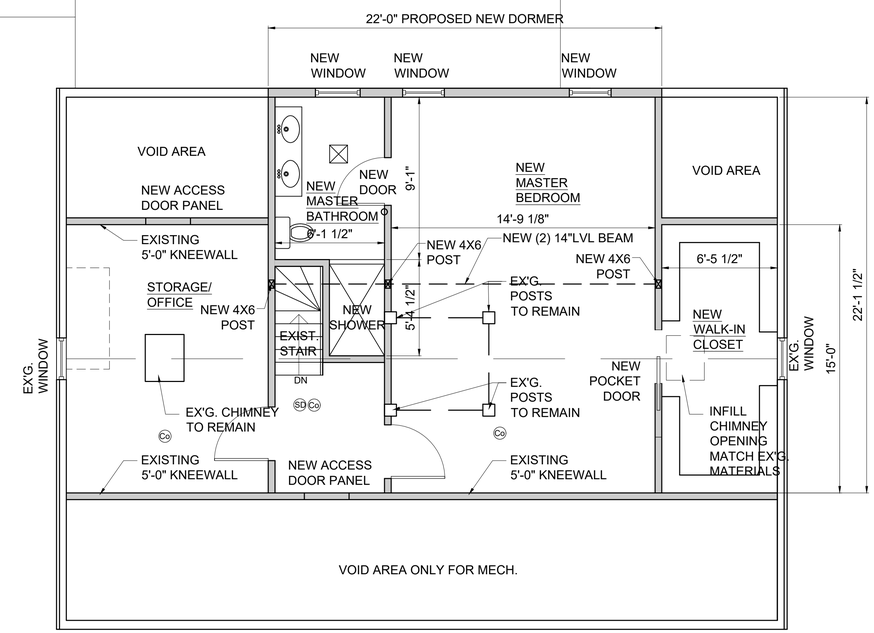

2 PROPOSED ATTIC FLOOR PLAN
1/4" = 1'-0"

WINTHROP STREET

Location

PROPOSED DORMER & INTERIOR RENOVATION 116 WINTHROP STREET MEDWAY, MA 02053

Choo & Company, Inc.
One Billings Road Quincy, MA 02171
617-786-7727 fax 617-786-7715

REGISTERED ARCHITECT ARTHUR K.F. CHOO No. 6319 BOSTON MA COMMONWEALTH OF MASSACHUSETTS

No.	Description	Date

Project No: 2024167
Scale: AS NOTED
Date: 09-04-2024
Drawn By: AMF

Drawing Name

EXIST/DEMO & PROPOSED THIRD FLOOR PLANS

Sheet No.

A-1.3

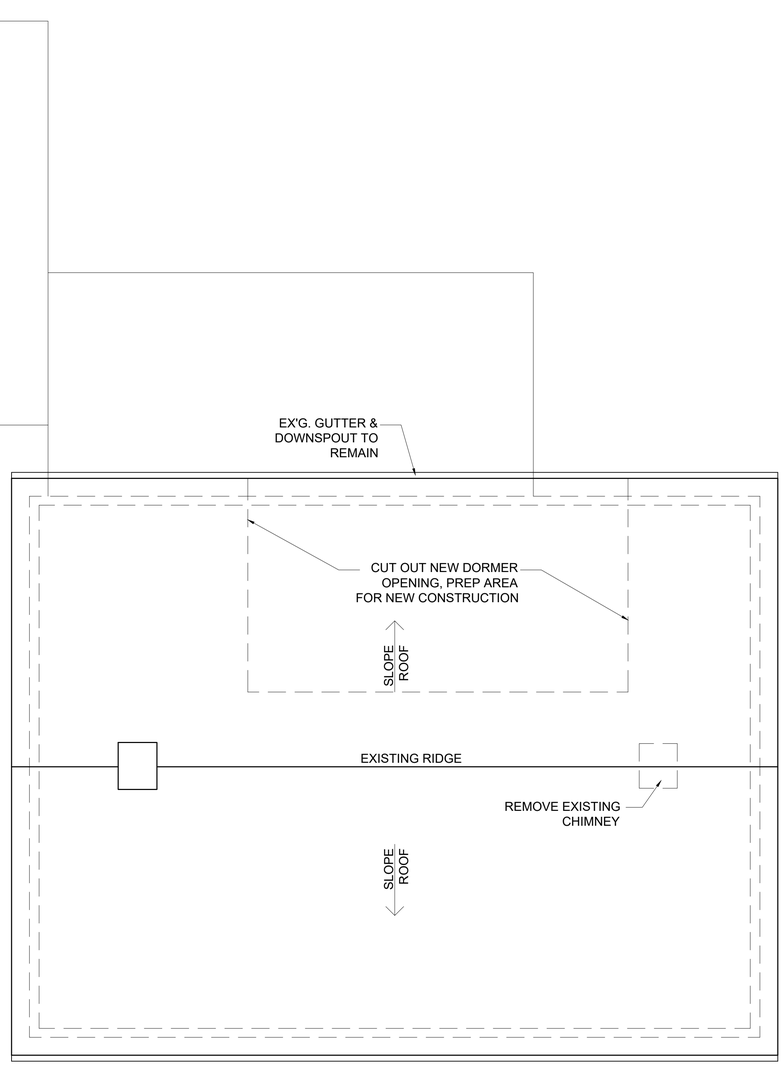

1 EXISTING/DEMO ROOF FLOOR PLAN
1/4" = 1'-0"

WINTHROP STREET

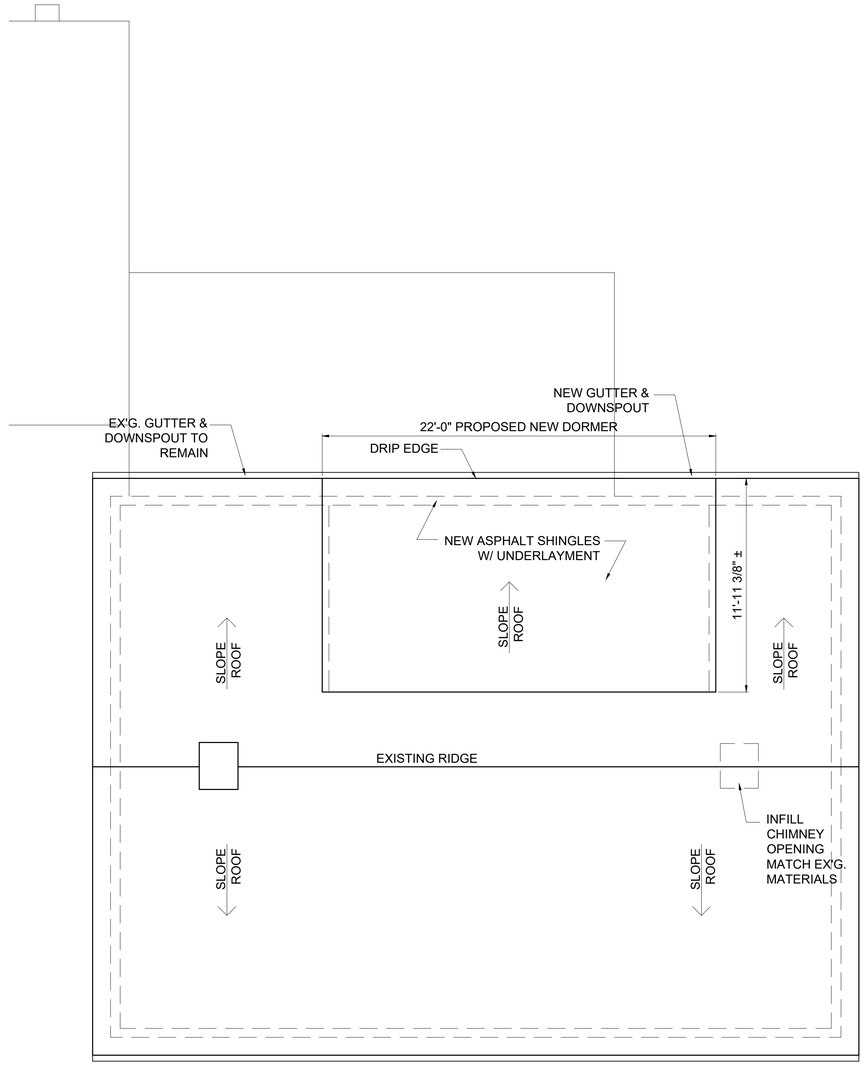

2 PROPOSED ROOF FLOOR PLAN
1/4" = 1'-0"

WINTHROP STREET

Location

PROPOSED DORMER & INTERIOR RENOVATION
116 WINTHROP STREET
MEDWAY, MA 02053

Choo & Company, Inc.
One Billings Road Quincy, MA 02171
617-786-7727 fax 617-786-7715

REGISTERED ARCHITECT
ARTHUR K.F. CHOO
No. 6319
BOSTON
MA
COMMONWEALTH OF MASSACHUSETTS

No.	Description	Date

Project No: 2024167
Scale: AS NOTED
Date: 09-04-2024
Drawn By: AMF

Drawing Name

EXIST/DEMO
& PROPOSED
ROOF PLANS

Sheet No.

A-1.4

WALL ASSEMBLIES

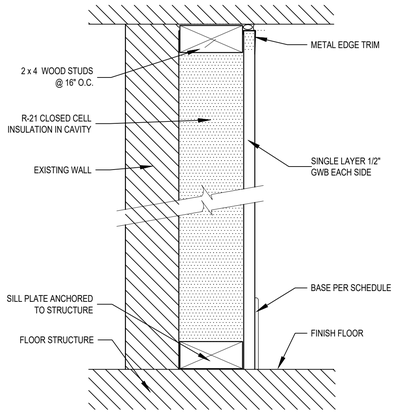

0 TYPICAL PARTITION - WOOD STUD

SCALE: 3"=1'-0"

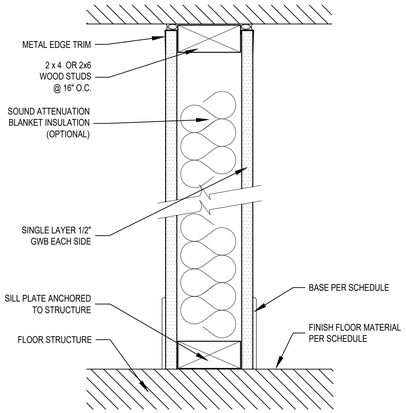

1 TYPICAL PARTITION - WOOD STUD

SCALE: 3"=1'-0"

ROOF DETAILS

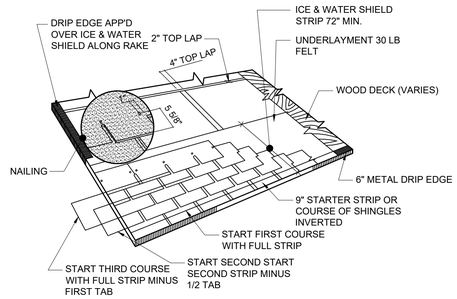

TYPICAL ROOF LAYOUT

SCALE: N.T.S.

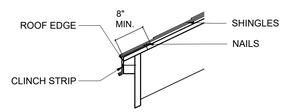

GENERIC DRIP EDGE

SCALE: N.T.S.

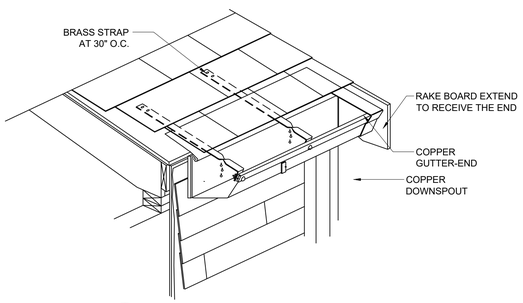

GUTTER END

SCALE: N.T.S.

Location

PROPOSED DORMER & INTERIOR RENOVATION
116 WINTHROP STREET
MEDWAY, MA 02053

Choo & Company, Inc.
One Billings Road Quincy, MA 02171
617-786-7727 fax 617-786-7715

REGISTERED ARCHITECT ARTHUR K.F. CHOO No. 6319 BOSTON MA COMMONWEALTH OF MASSACHUSETTS

No.	Description	Date

Project No: 2024167

Scale: AS NOTED

Date: 09-04-2024

Drawn By: AMF

Drawing Name

WALL ASSEMBLIES & ROOF DETAILS

Sheet No.

A-1.4

RECOMMENDED FASTENING SCHEDULE

BUILDING ELEMENT	NAIL SIZE AND TYPE	NUMBER AND LOCATION
STUD TO SOLE PLATE	8D COMMON 16D COMMON	4 TOE-NAIL OR 2 DIRECT-NAIL
STUD TO CAP PLATE	16D COMMON	2 TOE-NAIL OR 2 DIRECT-NAIL
DOUBLE STUDS	10D COMMON	12" O.C. DIRECT
CORNER STUDS	16D COMMON	24" O.C. DIRECT
SOLE PLATE TO JOIST OR BLOCKING	16D COMMON	16" O.C.
DOUBLE CAP PLATE	10D COMMON	16" O.C. DIRECT
CAP PLATE LAPS	10D COMMON	2 DIRECT-NAIL
RIBBON STRIP, 6" OR LESS	10D COMMON	2 EACH DIRECT BEARING
RIBBON STRIP, 6" OR MORE	10D COMMON	3 EACH DIRECT BEARING
ROOF RAFTER TO PLATE	8D COMMON	3 TOE-NAIL
JACK RAFTER TO RIDGE	16D COMMON	2 TOE-NAIL OR DIRECT-NAIL
JACK RAFTER TO HIP	10D COMMON 16D COMMON	3 TOE-NAIL OR 2 DIRECT-NAIL
FLOOR JOISTS TO STUDS (NO CEILING JOISTS)	10D COMMON 10D COMMON	5 DIRECT OR 3 DIRECT
FLOOR JOISTS TO STUDS (WITH CEILING JOISTS)	10D COMMON	2 DIRECT
FLOOR JOISTS TO SILL OR GIRDER	3D COMMON	3 TOE-NAIL
LEDGER STRIP	16D COMMON	3 EACH DIRECT
CEILING JOISTS TO PLATE	16D COMMON	3 TOE-NAIL
CEILING JOISTS (LAPS OVER PARTITION)	10D COMMON	3 DIRECT-NAIL
CEILING JOISTS (PARALLEL TO RAFTER)	10D COMMON	3 DIRECT
COLLAR BEAM	10D COMMON	3 DIRECT
BRIDGING TO JOISTS	8D COMMON	2 EACH DIRECT END
DIAGONAL BRACE (TO STUD AND PLATE)	8D COMMON	2 EACH DIRECT BEARING
TAIL BEAMA / DF TO HEADERS (WHEN NAILING PERMITTED)	20D COMMON	1 EACH END 4 SQ. FT. FLOOR AREA
HEADER BEAMA / DF TO TRIMMERS	20D COMMON	1 EACH END 8 SQ. FT. FLOOR AREA
1" ROOF DECKING (OVER 6" IN WIDTH)	8D COMMON 8D COMMON	2 EACH DIRECT RAFTER 3 EACH DIRECT RAFTER
1" SUBFLOORING (6" OR LESS)	8D COMMON	2 EACH DIRECT JOIST
1" SUBFLOORING (8" OR MORE)	8D COMMON	3 EACH DIRECT JOIST
2" SUBFLOORING	16D COMMON	2 EACH DIRECT JOIST
1" WALL SHEATHING (8" OR LESS IN WIDTH)	8D COMMON	2 EACH DIRECT STUD
1" WALL SHEATHING (OVER 8" IN WIDTH)	8D COMMON	3 EACH DIRECT STUD
PLYWOOD ROOF & WALL SHEATHING (1/2" OR LESS) (5/8" OR GREATER) (5/16",3/8", OR 1/2") (OVER 6" IN WIDTH)	 6D COMMON 8D COMMON 16 GAUGE GALVANIZED WIRE STAPLES, 3/8" MINIMUM CROWN; LENGTH OF 1" PLUS PLYWOOD THICKNESS SAME AS IMMEDIATELY ABOVE	 6" O.C. DIRECT EDGES & 12" O.C. INTERMEDIATE 6" O.C. DIRECT EDGES & 12" O.C. INTERMEDIATE 4" O.C. EDGES & 8" O.C. INTERMEDIATE 2 1/2" O.C. EDGES & 5" O.C. INTERMEDIATE
PLYWOOD SUBFLOORING (1/2") (3/8", 3/4") (1", 1 1/8") (1/2") (3/8")	 6D COMMON OR 6D ANNULAR OR SPIRAL THREAD 8D COMMON OR 8D ANNULAR OR SPIRAL THREAD 10D COMMON OR 8D RING SHANK OR 8D ANNULAR OR SPIRAL THREAD 16D GALVANIZED WIRE STAPLES 3/8" MINIMUM CROWN; 1 3/8' LENGTH	 6" O.C. DIRECT EDGES & 10" O.C. INTERMEDIATE 6" O.C. DIRECT EDGES & 10" O.C. INTERMEDIATE 6" O.C. DIRECT EDGES & 6" O.C. INTERMEDIATE 4" O.C. EDGES & 7" O.C. INTERMEDIATE 2 1/2" O.C. EDGES & 4" O.C. INTERMEDIATE
BUILT-UP GIRDERS AND BEAMA / DF	20D COMMON	32" O.C. DIRECT
CONTINUOUS HEADER TO STUD	8D COMMON	4 TOE-NAIL
CONTINUOUS HEADER, TWO PIECES	16D COMMON	16" O.C. DIRECT
1/2" FIBER BOARD SHEATHING	1 1/2" GALVANIZED ROOFING NAIL OR 16 GAUGE STAPLE, 1 1/2" LONG WITH MIN. CROWN OF 7/16"	3" O.C. EXTERIOR EDGE 6" O.C. INTERMEDIATE
25/32" FIBER BOARD SHEATHING	1 3/4" GALVANIZED ROOFING NAIL OR 8D COMMON NAIL OR 16 GAUGE STAPLE, 1 1/2" LONG WITH MIN. CROWN OF 7/16"	3" O.C. EXTERIOR EDGE 6" O.C. INTERMEDIATE
GYPSUM SHEATHING	12 GAUGE 1 3/4" LARGE HEAD CORROSION-RESISTANT	4" O.C. EDGE 8" O.C. INTERMEDIATE
PARTICLE BOARD UNDERLAYMENT (1/4"-3/4")	6D ANNULAR THREADED	6" O.C. DIRECT EDGES 10" O.C. INTERMEDIATE
PARTICLE BOARD ROOF AND WALL SHEATHING 1/2" OR LESS	6D COMMON	6" O.C. DIRECT EDGES 12" O.C. INTERMEDIATE
5/8" OR GREATER	8D COMMON	6" O.C. DIRECT EDGES 12" O.C. INTERMEDIATE
PARTICLE BOARD SUBFLOORING (5/8" OR GREATER)	8D COMMON	6" O.C. DIRECT EDGES 12" O.C. INTERMEDIATE
SHINGLES, WOOD*	NO. 14 B&S GAGE CORROSION RESISTIVE	2 EACH BEARING
WEATHER BOARDING	8D CORROSION	2 EACH BEARING

NOTE *: SHINGLE NAILS SHALL PENETRATE NOT LESS THAN 3/4" INTO NAILING STRIPS, SHEATHING OR SUPPORTING CONSTRUCTION EXCEPT AS OTHERWISE PROVIDED IN 780 CMR 1225.4.4.

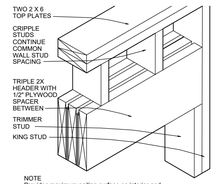

2X6 BEARING HEADER DETAIL
NTS

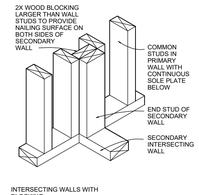

INSULATED WALL DETAILS
1"=1'-0"

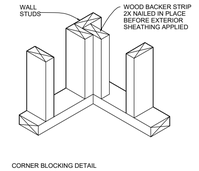

INSULATED WALL DETAILS
1" = 1'-0"

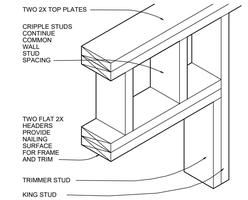

2X_PARTITION WALL HEADER DETAIL
NTS

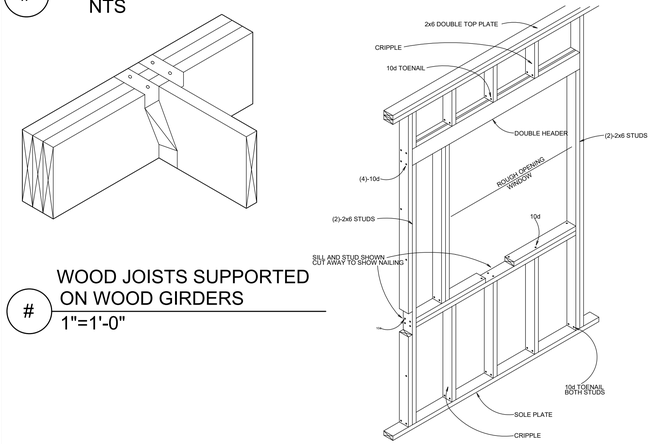

WOOD JOISTS SUPPORTED ON WOOD GIRDERS
1"=1'-0"

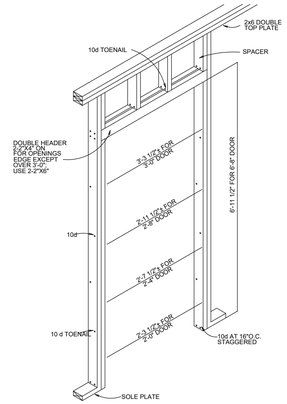

WINDOW OPENING DETAIL
1"=1'-0"

DOOR OPENING DETAIL
1"=1'-0"

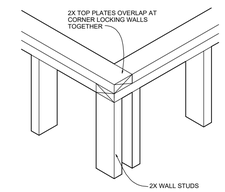

TOP PLATE FRAMING DETAIL
NTS

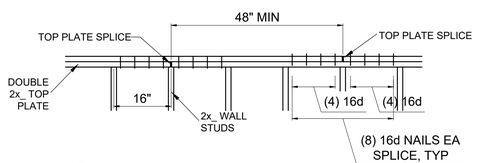

TYPICAL DOUBLE TOP PLATE SPLICE DETAIL
NTS

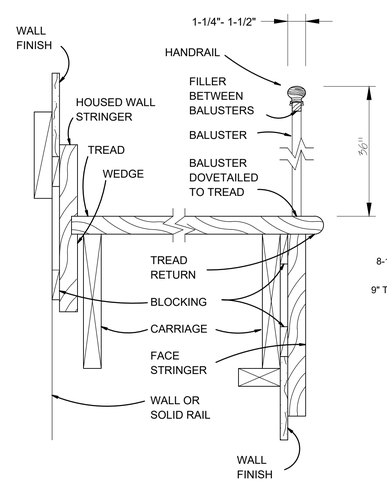

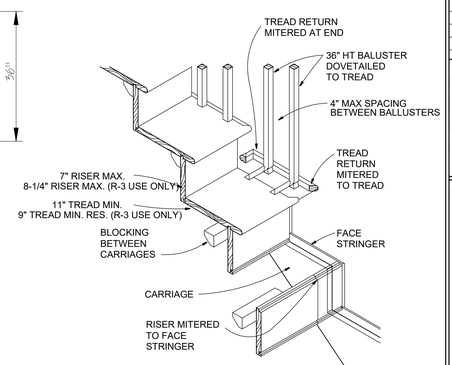

Location

PROPOSED DORMER & INTERIOR RENOVATION
116 WINTHROP STREET
MEDWAY, MA 02053

Choo & Company, Inc.
One Billings Road Quincy, MA 02171
617-786-7727 fax 617-786-7715

REGISTERED ARCHITECT ARTHUR K.F. CHOO No. 6319 BOSTON MA COMMONWEALTH OF MASSACHUSETTS

No.	Description	Date

Project No: 2024167
Scale: AS NOTED
Date: 09-04-2024
Drawn By: AMF

Drawing Name

FASTENING SCHEDULE & FRAMING DETAILS

Sheet No.

A-1.6